A Simulated Annealing Algorithm for Geometrical Assessment of Macromolecular Hydrophobic Interaction

Tomoko Hara
hara@translell.eco.tut.ac.jp

Carlos Adriel Del Carpio
carlos@translell.eco.tut.ac.jp

Laboratory for Informatics & AI in Molecular and Biological Sciences
Department of Ecological Engineering. Toyohashi University of Technology
Tempaku, Toyohashi 441-8580, Japan

1 Introduction

Macromolecular interaction is critical to many biological and biochemical processes and phenomena in living systems. Its assessment would lead to a deeper understanding of many relevant phenomena at the molecular level such as molecular and cellular recognition, signal transmission, and many other processes in life systems, as well as in drug and protein engineering.

It is widely recognized that one of the primary organizing principles in structural biochemistry and biology is the so called hydrophobic effect. The hydrophobic effect is the tendency of apolar molecular species to associate spontaneously in aqueous solutions. The hydrophobic effect at the molecular level involves contact interactions among apolar groups which are stabilized by entropic effects originated in the solvent.

In the present work we approach the problem firstly from a geometrical point of view. This consists in the evaluation of the changes in solvent accessible surface area (SASA) of proteins or any other macromolecules at interaction with other molecular species. We propose a methodology to assess hydrophobic interaction as a function of the decrement of SASA and the optimal accommodation of the interacting surfaces of macromolecules so as to maximize this decrement.

Finally we apply our methodology and attempt to assess the best configurations at interaction of macromolecular complexes in aqueous solutions.

2 Methodology

Estimation of interaction energies of solutes based on the solvent accessible surface area combined with experimental data was attempted by Eisenberg *et al.* [1]. In general, and in Eisenberg's model in particular, the interaction energy among molecules in solution is composed by four terms: van der Waals interactions (repulsion term) E_{vdw}, the cavity formation energy or void term E_{cav}, the electrostatic interaction $E_{coulomb}$, and the hydrophobic interaction E_h; i.e.:

$$E_{interaction} = E_{vdw} + E_{cav} + E_{coulomb} + E_h$$

The electrostatic term can be computed by the classical Coulomb law (0 por apolar or neutral solutes), the vdW interaction is well characterized, while the cavity formation energy is that arriving from the exclusion of solvent molecules initially attached to the interacting molecules.

Here we concentrate on the hydrophobic interaction energy which can be expressed as:

$$E_h = \sum_{i=1}^{m} \sigma_i SASA_i$$

From this equation it is evident that the interaction energy will be proportional to the SASA of the macromolecular system. Thus it can be hypothesized that a decrement in the overall SASA of the system will lead to a more stable configuration.

Assuming small changes on the cavity formation and van der Waals energies, we have implemented a simulated annealing algorithm to search the configurational space at interaction of two (or more) molecular systems. The degrees of freedom for nonflexible systems are five (positioning the center of mass of one of the molecules at the origin of coordinates, the other molecule position is defined by the three relative coordinates of position respect to the first molecule, and the two of rotation around its own axis), as shown in Fig. 1.

3 Results and Discussion

Fig. 2 illustrates the change in SASA with the configuration adopted at interaction by a bi-molecular system. The complex is composed of a peptide compose of 98 atoms and the other of 23 atoms. SASA is computed using the Richmond algorithm [2] and the temperature of the annealing processes was initially set to 0.5.

As predicted, a geometrical accommodation of both molecules so as to reduce the overall SASA as well as void formation in the contact surfaces is evident.

Further development of the present system will lead to the characterization of the potential of mean force (PMF) for different systems.

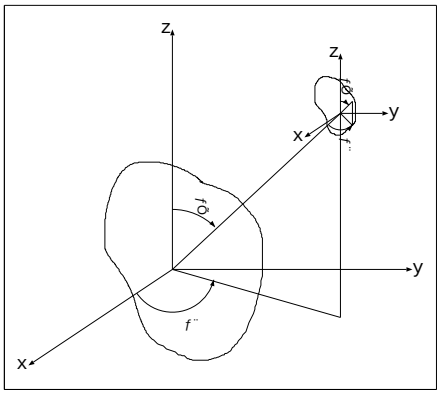

Figure 1: Freedom degrees for a system composed of 2 bio molecules.

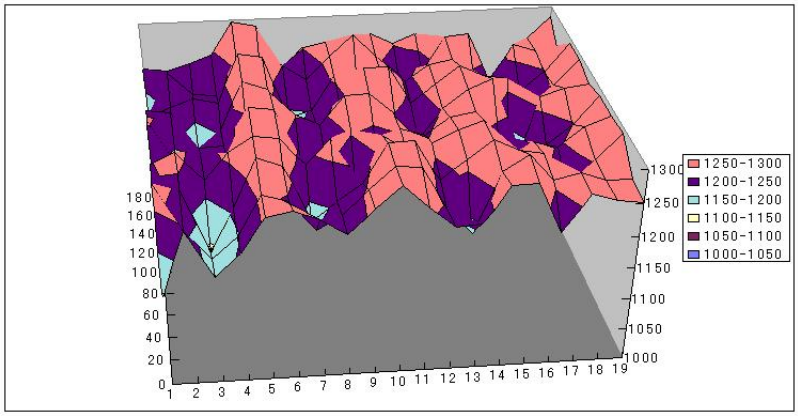

Figure 2: Variation of SASA for a system of 2 molecules.

References

[1] Eisenberg, D. and McLachlan, A.D., Solvation energy in protein folding and binding, *NATURE*, 319:199–203, 1986.

[2] Richmond, T.J., Solvent Accessible Surface Area and Excluded Volume in Proteins, *J. Mol. Biol.*, 178:63–89, 1984.